SV6 - 16 - 2NCSP

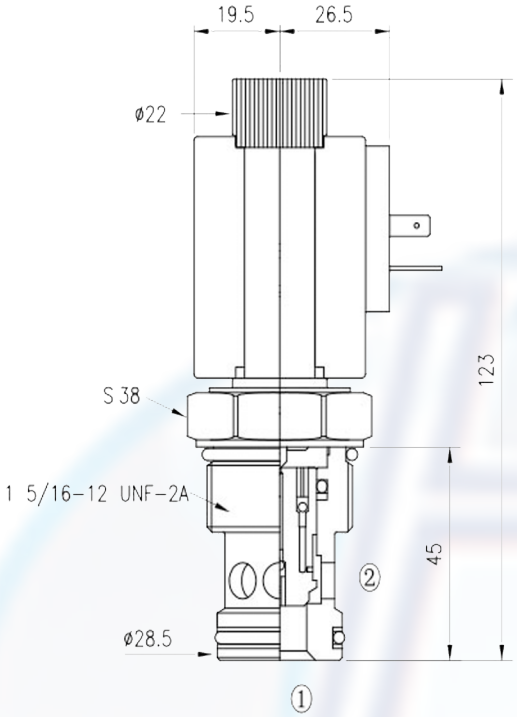

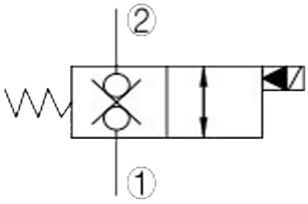

SPECIFICATION:

Max working pressure:	250bar
Flow max:	see performant chart
Internal leakage:	3 drops/min / 210bar
Filtration of oil:	25m or better
Temperature:	-30 ~ +110°c
Cavity:	16 - 2
Installatin:	65 ~ 70Nm
Coil rating:	85% ~110%

Continuous from 85% to 110% of rated voltage

PERFORMANCE

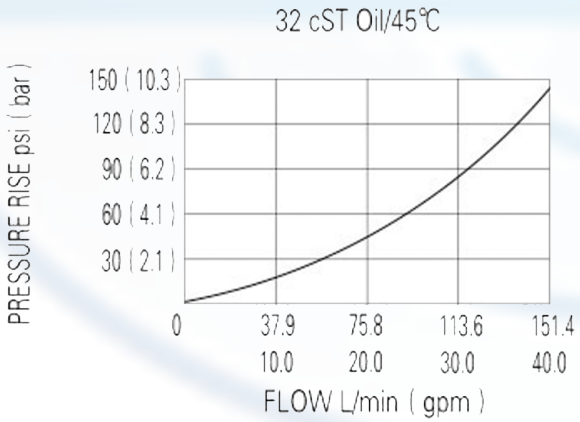

When de-energized, the valve blocks flow in both directions.
when energized, allowing flow from 2 to 1 and 1 to 2.

to order: SV6 - 16 - 2NCSP - □ - □

cavity

function

coil connection:
D = Double Lead
H = Hirschmann

voltage:
12 = 12V DC
24 = 24V DC
110 = 110V AC
220 = 220V AC